宮崎大学学術情報リポジトリ
University of Miyazaki Academic Repository

Effect of Grassland Development Methods on Soil Structure in the Coral Island (Kuro-shima) of Okinawa, Japan

メタデータ	言語: English 出版者: Engineers Australia 公開日: 2020-06-21 キーワード (Ja): キーワード (En): coral island, grassland development, grass-root distribution, soil structure, stone crusher 作成者: 細川, 吉晴 メールアドレス: 所属:
URL	http://hdl.handle.net/10458/5281

Hosokawa, Y.: Effect of Grassland Development Methods on Soil Structure in the Coral Island (Kuro-shima) of Okinawa, Japan, Proceedings of 2013 Conference of Australia Society for Engineering in Agriculture (Mandurah near Perth, Australia, 22-25, September, 2013), Paper No.:26:1-8, USB of the Conference proceedings, 2013.9 [Refereed Papers]

EFFECT OF GRASSLAND DEVELOPMENT METHODS ON SOIL STRUCTURE IN THE CORAL ISLAND (KURO-SHIMA) OF OKINAWA, JAPAN

Y. Hosokawa

Faculty of Agriculture, University of Miyazaki, Miyazaki, 889-2192, Japan
Email: hoso@cc.miyazaki-u.ac.jp

ABSTRACT

In some coral islands of Okinawa, Japan, the beef cattle production had been carried out for a long time while grazing in native pasture and in developed pasture traditionally. The pasture in Kuro-shima, being very flat, was divided with coral stone walls because of stony due to coral island. The grassland productivity was low and the beef cattle production was continued with little progress. A large scale of the grassland development in Okinawa was started from 1984. As the first method for grassland development, the equipment of "stabilizer", improved a road stabilizer for digging coral bedrock deeper, was used. In the second method, they used the equipment of "stone crusher" improved to make coral stones smaller after the stabilizer's work. The distribution of sieving stone and the grass roots were compared with two methods. As the result, the weight content of stone under 30 mm size was 84% of the first method and 86% of the second one, and the stone in top layer (0~10 cm depth) was smaller by the second one. The percentage of grass roots of the second one was a lot in the deeper soil layer than of the first one. Thus the method using stabilizer and stone crusher was effective for the coral grassland.

Keywords: coral island, grassland development, grass-root distribution, soil structure, stone crusher.

INTRODUCTION

We often image that most of coral islands in the Pacific Ocean are resort area visited by many foreigners, for example Great Barer Reef in Australia and Tubbataha Reef National Marine Park in in the Philippines, being registered already as World Natural Heritage. Their islands have beautiful coral and strange fishes in the sea and a tropical rain-forestry and various fruits in the land, surrounded by coral reef. On the other hand, they introduce the islands of Bora Bora, Society Islands, French Polynesia in the South Pacific Ocean (Time Home Entertainment Inc., 2011) and Ogasawara Island, new World Natural Heritage in 2011, Japan in the Pacific Ocean, being formed by the oceanic volcano at first and then their coast was by coral. In the southern west of Japan, there are several coral islands in the Yaeyama Islands of Okinawa Prefecture. The ground is mainly bedrock of Ryukyu Limestone formed as an upheaval (in the diluvial epoch) of the sedimentary of huge coral and shell in the Palaeozoic era.

The Yaeyama Islands, as one of the Ryukyu Kingdom, former Okinawa Prefecture in Japan, was recorded as people had lived in 1519 (Taketomi Town, 2011), and also estimated that the beef cattle production and the sugar cane plantation had been already carried out about 120 years ago, from the report being written after Mr. Sasamori investigated the southern islands in 1893 (Sasamori, 1894).

Kuro-shima (Kuro island), one of coral islands of the Yaeyama Islands, is very flat with the highest level of 15.3 m above the sea and the area of 10.0 km^2. Its major industry is a beef cattle production in the pasture, except for sightseeing with a beautiful coral. Many pastures are divided by stone walls, stacked with coral stones from pasture. The pasture soil type is the Shimajiri Mahji Soil from Ryukyu Limestone (Tokashiki, 1993) and its layer is not thick because a base rock of the soil is basically Ryukyu Limestone being coral bedrock. Therefore, the beef cattle production had been carried out in native grassland and in developed pasture traditionally for grazing. However, in the pasture were remarkably many bare rocks and limestone rocks with various sizes, the beef cattle production were always carried in a low land-utilization with a little grazing capacity due to less grass

production. To raise a beef cattle productivity, it was necessary to innovate a grassland development method using equipment to destroy coral bedrock and then to level the ground for grassland.

This paper describes the effect of grassland development methods on soil structure, comparing with two kinds of equipment to remove stone from the coral-stony rangeland soil.

METHOD AND MATERIALS

Studying on the methods to remove stone from field soil

In Japan, several crop fields had been developed using the equipment to remove stone from field soil. The characteristics of some equipment were compared from some research reports in that time.

Studying on the methods for grassland development in Kuro-shima

Studying on methods of removing stones from field soil in Kuro-shima

There were the two methods of removing stones from field soil. The characteristics were analysed about the stabilizer and the stone crusher for the grassland development in the coral island, from their information data.

Investigation of the distribution of stone sized by sieving

The plan was a situation of each two trial digging sites for sieving analysis to A pasture developed by the stabilizer in 1992 and B pasture by the stabilizer (ahead) and the stone crusher (after the stabilizer) in 1995. Total 4 sites situated within 15 m from their border, being much closed each other under almost same soil condition, in July, 1998. The size of one trial site was a squire of 1.0 m×1.0 m and 30 cm depth. One layer of 10 cm depth each from the soil surface was dug by a power shovel of 0.2 m^3 bucket and then scraped and formatted by hand shovels and scrapers. Each layer was classified in 0~10 cm, 10~20 cm, and 20~30 cm depth. The soil including various stones of volume of 1.0 m^2 ×10 cm depth each was sieved with 120, 100, 80, 50 and 30 mm size sieves for the sieve analysis. While taking out the grass root, the weight of stones passed through each sieve in each layer was measured with a scale of 100 kgf (980 N), and then the percentage of total sieving weight was calculated.

Physical properties of coral stone in the soil by both methods of the stabilizer and the stone crusher

The physical properties were measured the rate of mud content, the density and the water absorption, the spherical rate, and the point load, to 30 pieces of stones picked up at random after sieving stone test in the soil by both methods of the stabilizer and the stone crusher. The rate of mud content was calculated by the equation (1), where DM (kgf): weight dried for 24 hours at 110 centigrade degree for stone with mud, DW (kgf): weight dried for 24 hours at 110 centigrade degrees for stone washed out mud.

The rate of mud content of stone (%) = (DM-DW) / DW × 100 (1)

The density and the water absorption was calculated by the equation (2) and (3) respectively, where DW (gf): weight dried for 24 hours at 110 centigrade degrees for stone washed out mud, MS (gf): weight of saturated surface-dry condition for 24 hours in the water at 20 centigrade degrees, MW (gf): weight of stone in the water at 20 centigrade degrees.

The density of stone (g/cm^3) = MS / (MS-MW) (2)

The water absorption of stone (%) = (MS-DW) / DW × 100 (3)

The spherical rate, indicated a stone shape as a spherical rate of sphere = 1.00, was calculated by the equation (4), where a (mm): a long axis length, b (mm): a middle one, c (mm): a short one.

The spherical rate = $[(b \times c) / a^2]^{1/3}$ (4)

The point load (a tensile test for stone) was calculated by the equation (5), where P (N): a load at the stone destruction, D (mm): a distance at load in Figure 1.

The point load (MPa) = $0.9 \times P / D^2$ (5)

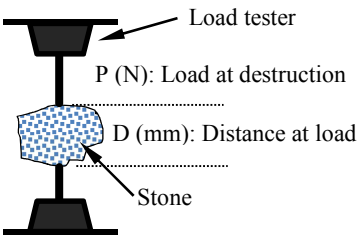

Figure 1 Point load test for stone

Investigation of grass roots above two sites
At the sieving stone test, the grass roots were selected from soil and stone cautiously in each layer, i.e., 0~10cm, 10~20cm, and 20~30cm depth, in two sites. The weight of the roots was measured at first about fresh root removed soil at the site, and then the air-dry weight was also measured after air-drying for over 48 hours at 70 centigrade degrees using a dry-oven in a laboratory.

RESULTS AND DISCUSSION

Methods to remove stone from field soil

In Japan, there were several methods to remove stone from field soil. The characteristic of some equipment reported by Tokunaga *et al* (1988) and Inoue *et al* (1988) is shown in Table 1, while indicating Figures 2~4. Furthermore, the characteristic of the stabilizer and the stone crusher from the technical reports by Sano (1994) and Japan Association of Agricultural Engineering Enterprises (1994) is also shown in Table 1, while indicating Figures 5~6.

The equipment of removing stone is very useful in a stony land. As shown in Table 1, however, the equipment using crushing roller and hammer rotor has some defect like a shallow working-depth, a former treatment before working, a shorter durability of hammer, and an unfitting to a large field. On the other hand, the equipment of a stabilizer and the stone crusher fits to a large field up to 30~40 cm depth because of many hard conical bits, adding a driving with wheel or crawler type.

Comparison of the methods to remove stone in Kuro-shima, being a coral island

As shown in Table 1 and Figures 5~6, these two methods of removing stone in field soil were revolutionary techniques in Japan. In particular, the stabilizer was effectively destroyed the coral bedrock in native grassland

Table 1 Comparison of the characteristics of equipment to remove stones

Fig.	Major equipment	Depth	Construction and driving method	Construction evaluation
2	Crushing roller (Made in England)	About 15 cm	Method is to pull the equipment by tractor. It selects stones by front picker at first and then destroys stone by crusher roll.	1. Working depth up to 15 cm is shallow 2. Hard stones destroyed are made to rough and sharp shape. 3. Destroyed stones are spread onto soil surface.
3	Hammer rotor (Made in Germany)	About 15 cm	Method is to pull the equipment by tractor. 18-32 hammers break stones near soil surface after digging up stones from soil by a stone-upper machine	1. Treatment depth is shallow (15 cm). 2. The work needs firstly to dig up stones from soil by a stone-upper machine, therefore the process is not simple. 3. No big working ability and unfits to a large field. 4. Hammer is not so durable due to hammering.
4	Hammer rotor (Made in Italy)	About 30 cm	Method is to pull the equipment by tractor. 18-32 hammers break stones in soil after digging up stones from soil by a tipping stone machine	1. The work needs firstly to dig up stones from soil by a tipping stone machine, therefore the process is not simple. 2. Before this work, the treatment of leveling due to a tractor work. 3. Due to destroyed stones pass through the lattice netting, the work unfit to clay soil and a large field.
5	Stabilizer for agriculture (Wheel type, Made in Japan)	About 40 cm	This work fits mainly for grassland development in coral bed rock while destroying by conical bits to small sized stones. The original machine was a stabilizer for a road construction.	1. Destroying work to about 40 cm depth is by a 2 m wide's rotor with many conical bits and 360 PS. Its movement is easy by a wheel type in a wide field. 2. Destroying to small size stones, but about 50 mm size stones are still remained.
6	Stone crusher (Crawler type, Made in Japan)	30 cm	The destroying equipment is fixed to a bulldozer or a crawler-type stabilizer. Stones and rocks are directly destroyed by over 100 hard-conical bits. Without former treatment like leveling land, it fits to a large field.	1. It fits to various construction condition with crawler shoes for wetland. 2. Stones made small size by some plates are distributed smaller stones to upper soil layer and bigger one to lower layer.

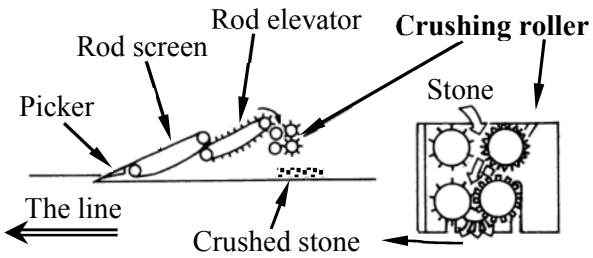

Figure 2 Equipment using crushing roller
(Made in England)

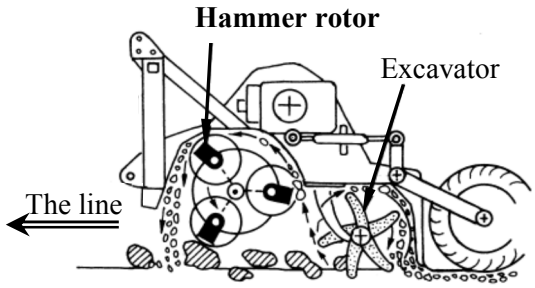

Figure 3 Equipment using hammer rotor
(Made in Germany)

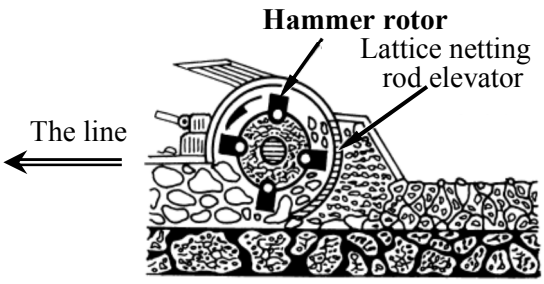

Figure 4 Equipment using hammer rotor
(Made in Italy)

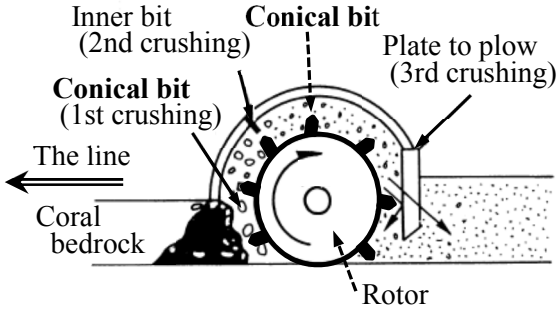

Figure 5 Equipment using stabilizer
(Wheel type, Made in Japan)

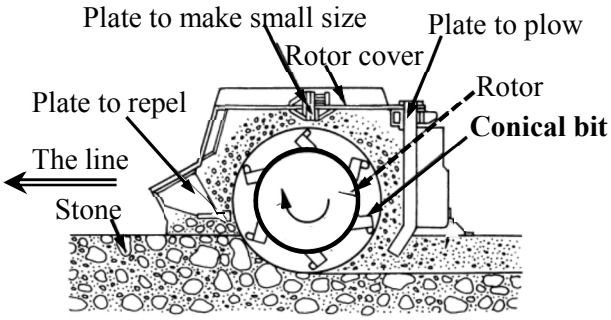

Figure 6 Equipment using stone crusher
(Crawler type, Made in Japan)

Photo 1 Native grassland of Kuro-shima in 1984
(Bottom: Undeveloped pasture in 2013)

Process by Method using Stabilizer

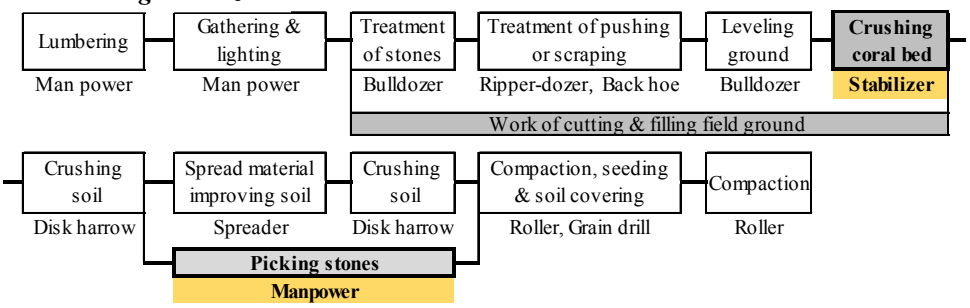

Process by Method using Stabilizer and Stone Crusher

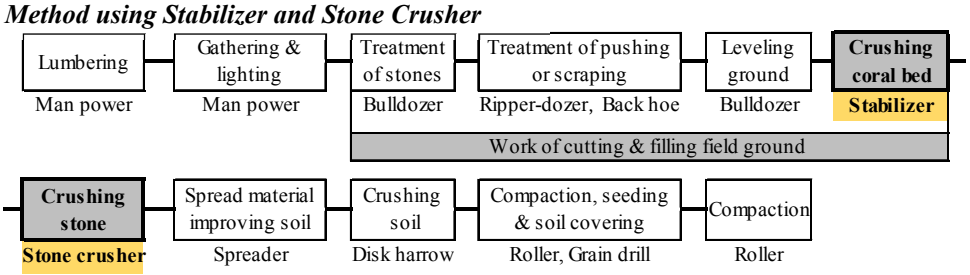

Figure 7 Processes by stabilizer method (top) and method of stabilizer and stone crusher (bottom)

and traditional grassland under 50 mm sized stone in 40 cm depth, and the stone crusher, instead of picking stones from pasture surface, was also effective work (Japan Agricultural Land Development Agency, 1985 and 1994).

As shown in Figure 7, the work from "Lumbering" to "Crushing coral bed" in the top process line is same in the bottom, and the difference of two methods is to use a stone crusher instead of the work of "Picking stones" by manpower, because of a high cost construction by using manpower and less workers in that site actually.

Distribution of stone by sieving the soil in the different fields developed

Figure 8 shows the distribution of stone by the sieving test. The percentage of total sieving weight under 30 mm size was averaged 84% in the stabilizer method and averaged 86% in the method using the stabilizer and the stone crusher. The coral stone was particularly made small or forced into the bottom by the stone crusher, because the percentage of total sieving weight was remarkably 97% in the top layer of 0~10 cm. However, in the 2nd one of 10~20 cm and the 3rd one of 20~30 cm, those were almost same between two methods in case of 30 mm size. In case of 50 and 80 mm sizes, it was found a slightly improvement to make small or to force into the bottom. It is important for the stone size and the stone quantity in each layer to influence to grass production. Table 2 shows the maximum stone size and stone content comparing with two methods. The maximum stone size of the soil layer of 0~30 cm was 200 mm in the 1st Point and 120 mm in the 2nd Point in the stabilizer method pasture, and 100 mm in both points in the pasture by the both methods. The averaged stone content of both points was 11.0% in the former and 9.3% in the latter. Particularly, the stone content of 2nd and 3rd layers were almost same in two-method pasture, however, them of 1st layer was obviously different as 6.2% of the former against 1.9% of the latter.

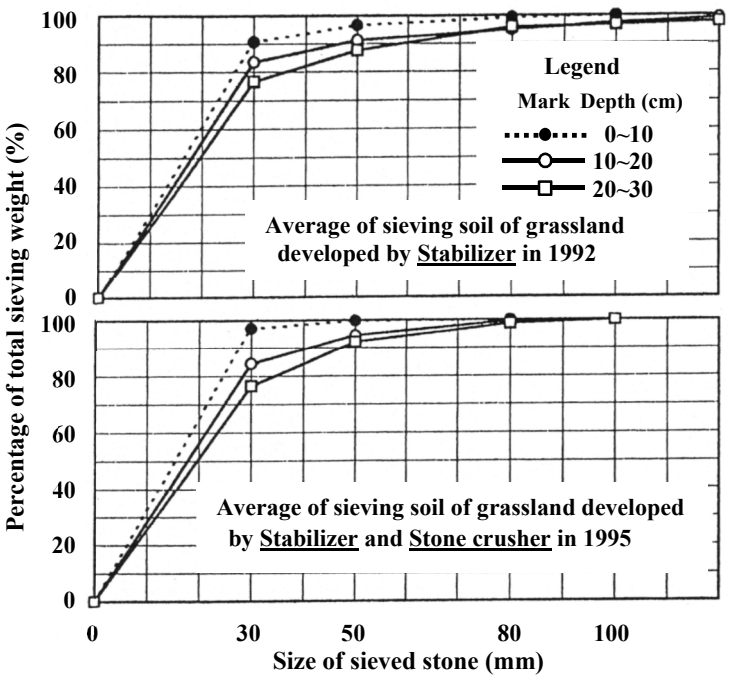

Figure 8 Distribution of stone by sieving

Table 2 Comparison of maximum stone size and stone content

Site of method	Depth (cm)	Max. stone size (mm) *		Stone content (%) *		
		1st Point	2nd Point	1st Point	2nd Point	Average
Stabirizer	0～10	80	100	5.9	6.5	6.2
	10～20	200	120	10.3	11.9	11.1
	20～30	170	120	15.5	15.9	15.7
	Max. or Ave.	200	120	10.6	11.4	11.0
Stabirizer & Stone crusher	0～10	80	80	2.0	1.8	1.9
	10～20	80	100	11.0	9.4	10.2
	20～30	100	100	14.4	16.9	15.7
	Max. or Ave.	100	100	9.1	9.4	9.3

* Size of above 30 mm

From these results, the stabilizer is strongly effective to destroy the coral bed ground, and the stone crusher is effective to make 100, 80, 50 mm size stones smaller and to force bigger stones into the bottom. Many farmers do not expect to remain stones on pasture surface and to stack stones in the edge of pasture. Although the work of picking stones needs high cost and there is no place to stack stones picked, we must admit the function of the stone crusher.

Physical properties of stones in the different fields developed

The rate of mud content of stones was 0.89±0.56% being less than 1%, as shown in Table 3. While sieving by several sieves, the mud was fallen down. Therefore, the sieving analysis used the weight passed through sieves included a little error to neglect. The density and the water absorption are also shown in Table 3. The density of stone was 2.35±0.12 g/cm3 and the water absorption was 2.44±0.94%. The coefficient of variation was 5.1% in the density but 38.5% in the water absorption, and there was not small variation in the water absorption because coral stone has various spaces inside, being porous. Photo 2 shows some coral stones being irregular shape and porous and we can see obviously the ancient coral under the sea changed to stone, but grazing cattle often hit foot on the stone in the pasture.

As shown in Table 3, the spherical rate was 0.69±0.07, indicating near a sphere but not reef shape. Using the average of a, b, and c, the value of (b/a) and (c/b) equal to 0.75 and 0.57 respectively, and the coordinate of (c/b, b/a) indicates a shape of "Desk" in Figure 9 (Zingg, 1935). While the rotor of the equipment rotates by a high speed, many conical bits hit the stone in soil and then destroyed them in an instant. When working a stabilizer, stone and stone bed are easy broken because they are hold hardly, but in case of a stone crusher, it is estimated that stone are not easily broken because stone are not hold hardly by the soil and stone in the ground.

The point load strength of coral stones, as shown in Table 3, was 5.4±4.7 MPa with a large coefficient of variation of 87%, and its range (from Max. to Min.) indicated from 23.9 MPa to 1.1 MPa with also a large range. This reason is due to coral stone with porous and stripe grain from the coral origin. And also some coral stone with grain has various strengths as wood indicates generally different strengths depend on the grain direction. On the other hand, the compressive strength for 3 cylindrical pieces, after core boring to bigger coral stone in a laboratory, was 4.1, 11.5, and 12.2 MPa, and their average was 8.2±4.0 MPa. Number of test pieces was a little but the compressive strength of 8.2 MPa was larger than the point load strength of 5.4 MPa, indicating about 1.5 times of the latter point load strength. It must be different with the coral's grain having the core boring direction. The properties of stones cannot lead the construction evaluation of grassland development methods. Therefore, It is estimated the coral stone were made small in case of hitting of conical bits by the revolution of the rotor, and a lot of stones were forced into the bottom of soil layer without destroying in case of being caught by conical bits.

Table 3 Mud content, density, water absorption, spherical rate and point load strength of stones

Item	Mud content (%)	Density (g/cm^3)	Water absorption (%)	Long axis: a (mm)	Middle axis: b (mm)	Short axis: c (mm)	Spherical rate**	Point load strength (MPa)
Max.	2.56	2.62	3.80	153.4	112.0	73.7	0.79	25.9
Min.	0.05	2.04	1.17	45.5	37.0	20.9	0.54	1.1
Average	0.89	2.35	2.44	86.6	64.7	36.9	0.69	5.4
±SD (n-1)	0.56	0.12	0.94	26.8	19.8	11.8	0.07	4.7

* 30 pieces selected at random from stones, ** Spherical rate = $[(b \times c) / a^2]^{1/3}$

Photo 2 Coral stones in pasture of Kuro-shima (2013)

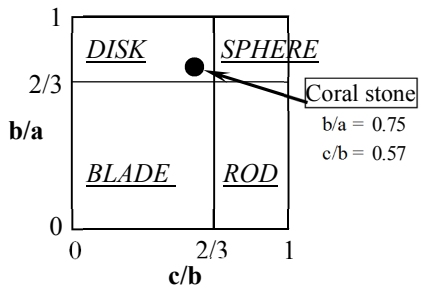

Figure 9 Classes of stone's shape (Zingg 1935) **and coral stone's point**

Comparison of grass roots from the different fields developed

Table 4 shows the weight and the percentage of the grass roots in the different construction methods. The grass in both pastures was Giant star grass (*Cynodon nlemfuensis* Vandery) for the grazing pasture, preferring by many farmers in Kuro-shima. The average weight of grass roots in the stabilizer method pasture was 57.8 g, being a lot actually than 41.2 g in the two-method pasture. The former pasture was developed 6years ago against the latter one 3 years ago at the investigation, and in case under same grassland maintenance between both pasture, it was influenced by passed years. Furthermore, the averaged percentage in the stabilizer method pasture was 91.1% in the 1st layer of 0~10 cm, being a slightly large against 82.3% in the two-method pasture. However, in the 2nd and 3rd layers, the average percentages in the latter indicated a large than the former.

From the result, the grass root was at least influenced by 3-year difference passed; a pasture constructed in 1992 and B one in 1995, but grew in deeper soil layer of the latter pasture. Grass production may generally be influenced by growing of grass root, and the grass may prefer softer soil developed by the both methods, in spite of finding many stones in the deeper soil layer. It will be necessary to investigate the grass production in each season to compare.

Table 4 Comparison of grass roots in the different construction methods

Site of method	Depth	1st Point		2nd Point		Average	
	(cm)	(g)	(%)	(g)	(%)	(g)	(%)
Stabilizer	0～10	62.0	91.2	43.3	91.0	52.7	91.1
	10～20	4.3	6.3	4.0	8.4	4.2	7.2
	20～30	1.7	2.5	0.3	0.6	1.0	1.7
	Total	68.0	100.0	47.6	100.0	57.8	100.0
Stabilizer & Stone crusher	0～ 10	31.2	79.4	36.6	85.1	33.9	82.3
	10～20	5.2	13.2	4.0	9.3	4.6	11.2
	20～30	2.9	7.4	2.4	5.6	2.7	6.5
	Total	39.3	100.0	43.0	100.0	41.2	100.0

* Kind of the grass was Giant Star Grass in both sites

CONCLUSION

The methods to remove stones in the stony fields were studied in Japan. The stabilizer for agriculture land and stone crusher were remarkably effective to develop the grassland in the coral islands of Okinawa, Japan. The characteristic of two methods was compared between the method by the stabilizer and the method by the stabilizer at first and then using the stone crusher later. The summary of this study is concluded below.

1. The stabilizer was very effective to destroy the coral bedrock and to make stones small under 50 mm size for the grassland in the coral island.
2. It needed the work of picking stones on pasture surface after stabilizer's construction. But its cost was very high under fewer workers in that site. They required the stone crusher without picking works.
3. After sieving the soil including stones, the weight content of stone under 30 mm size was 84% of the stabilizer method and 86% of the both methods using the stabilizer and the stone crusher. Especially, the stone in top layer of 0~10 cm was made smaller by the both methods than the stabilizer method. However, the stone crusher was effective to make 100, 80, 50 mm size stones smaller and to force bigger stones into the bottom soil layer.
4. The percentage of grass roots in the layer of 20~30 cm depth by the both methods was a lot than in the stabilizer method. Thus the both methods was effective for grass root to grow in the coral island.

The pursuit investigation in March, 2013 (Photo 3 in the end):
The grassland developed by the both methods or by the stabilizer only became old after several years and then stones came out on the pasture surface. On some pastures by the both methods, I found that plowing into 20 cm depth had a serious problem of digging up many stones from pasture bottom. In other place, the Japanese radish field with 40 cm depth was developed by the stone crusher (Hosokawa, 1998) but farmer had serious complaint that there was many large stone in the bottom of crop field and then some twisted radishes with strange style, not straight. After all, the crop field was treated by sieving while working the equipment with netting tool.
Consequently, I would like to recommend that to improve the old pasture by themselves, plowing up to about 10 cm depth, not 20~30 cm depth, must be better with less larger stones.

ACKNOWLEDGEMENTS

The author would like to thank Prof. & Dr. Kawamoto (University of the Ryukyus) for giving the research report and a useful suggestion on the grassland development in Okinawa Prefecture. Also, the author wishes to thank Mr. Tamayose (in Naha City, a former researcher of Okinawa Prefectural Animal Research Centre), Mr. Matsubara (in Kohama of Taketomi Town, Okinawa Prefecture, a former engineer of Taketomi Town Office), Mr. Funamichi and Mr. Kohbaru (in Kuro-shima of Taketomi Town, Okinawa Prefecture, Beef cattle farmers), Mr. Watanabe (in Kurume City of Fukuoka Prefecture, a construction expert), and Nansei Kaihatsu Co. Ltd. (in Ishigaki City of Okinawa Prefecture, a construction company using stabilizers and stone crushers) for giving the actual information on the grassland development and maintenance in the coral island of Okinawa Prefecture.

REFERENCES

Hosokawa, Y., *et al*. (1998). Improvement of the stony farmland by Stone Crusher, *Jour. JSIDRE*. 66(5):29-34. (In Japanese)

Inoue, K., Ito, S., Nitanai, M. and Toyoyama, T. (1988). Improvement and development of Rotary-type Stone-Crusher and Stone-upper Equipment, *Jour. JSIDRE*. 56(12):25-29. (In Japanese)

Japan Agricultural Land Development Agency (1985). Technical report on the grassland development method by Stabilizer, pp.1-25. (In Japanese)

Japan Agricultural Land Development Agency (1994). Technical report on the grassland development in Okinawa Prefecture, pp.32-59. (In Japanese)

Japan Association of Agricultural Engineering Enterprises (1994). Report of the removing-stone construction on the Stone-Crusher CS 210 (Komatsu Co. Ltd.). (In Japanese)

Sano, F. (1994). Improvement and development by the equipment of removing stone, *JAGREE*. 48:69-79. (In Japanese)

Sasamori, G. (1894). Southern Islands Exploration, (*Original*: *Sasamori published in Hirosaki, Aomori Prefecture.* 532p.), [*Reprint*: Southern Islands Exploration 1 (326p. 1982) & 2 (324p. 1984), Heibonsha, Tokyo]. (In Japanese)

Taketomi Town (2011). Statistical Survey of Taketomi Town, 20p. (In Japanese)

Tokashiki, Y. (1993). The characteristic properties of the Shimajiri Mahji and Jahgaru Soils in Okinawa Prefecture, *Japanese Pedologist*. 37(2):99-112. (In Japanese)

Tokunaga, K., *et al*. (1988). Developing experiment of stone-crushing method using Rotary-type Stone Crusher in a stony crop field, *Jour. JSIDRE*. 56(12):17-24. (In Japanese)

Time Home Entertainment Inc. (2011). Amazing Earth –The Beauty and Wonder of Our Living Planet– (Ed. by Knauer, K.), TIME, New York, USA, p. 83.

Zingg, T. (1935). Beitrag zur Schotteranalyse, Schweizer Miner *Petrog. Mitt.* 15:39-140.

Reference photos

Photo 3 1: Kuro-shima from the sky, 2: Stabilizer method (40 cm depth) in 1992, 3: Stone crusher method (30 cm depth) in 1995, 4: Conical bits of Stabilizer, 5: Conical bits of Stone Crusher, 6: Stabilizer next to the author (1.75 m height) in 2013, 7: Stone Crusher in 2013